DR-2 Design Report-2 rev.1.3

(see disclaimer notice at the end of this paper)

Rotary Valves, Then and Now – An Improved Conical Rotary Chromatographic Valve*

Analytical Flow Products, Division of Mecanique Analytique Inc.
233, Jalbert St. W., Thetford Mines, QC, Canada G6G 7W1 • Email: info@afproducts.ca • Web: www.afproducts.ca
*See disclaimer notice available on our website at www.afproduct.ca *The author may be contacted at : ygamache@afproducts.ca

PART 1 Focus on Existing Valve Technology

Abstract:

This paper is the result of many years of experience, frustration and feedback from users in the field. All valve performances, ours and others, shown in this paper, have been cross checked and confirmed by a third party. See ref. [11]

The purpose of this paper is to highlight the difference between the new patented AFP® technology and existing products. It also clarifies some important details too often misunderstood, misinterpreted or simply overlooked. After reading this paper, we believe that system integrators and operators will have a much better understanding of the innovations proposed and will benefit from their use.

Introduction:

Considering the market for GC rotary valves is still dominated by early concepts as shown in figure 1-D, E, F and I, we saw the need to write and publish this design report. Many things have been said, written and published about almost every aspect of analytical technology in use today. For example there are many text books and special periodicals that cover separation techniques, detector technology and application methods. However, very little has been published about chromatographic valve systems. GC valves are in use in almost every gas chromatograph with different varieties of columns and detectors. Their prices range from as low as $10,000 to $175,000 or more. This is the case with complex GC/MS systems.

In all these systems, the valve limits the performance, in terms of long term repeatability, sensitivity, and periodic maintenance frequency. Poor valve performance or poor selection will invariably lead to poor analysis no matter what your system technology is and which price you paid. The valve is the last item that you want to neglect, because your entire system depends on it. We have demonstrated that it is possible to increase 3 times the system sensitivity and improve separation simply by selecting the proper valve and its proper use. This is without changing the detector or the column or by using a sample concentrator. See ref. [1]

A Brief History

In the early day of automated instruments for chromatography, the user had to confront the problem of having a repeatable sample size injection into the column. Before a proper valve was available, chromatographers used a syringe to inject gas or liquid samples into their system. Obviously, this depended on operator ability, and the sample volume wasn't constant from one sample to the other. To overcome this problem, various type of valves have been designed over the time. Some of them are shown in figure 1. This figure shows the various concepts that have been developed over the years, to ease the process of sample injection.

Figure 1-A shows a spool based valve that relies on a sliding o-ring mounted on a stem to allow the sample to enter the injection flow path. This concept was used in some early Varian™ instruments. Obviously this type of valve was plagued with fast wearing parts, particle contamination and a high leak rate. The inboard contamination was a real problem when the valve was in use for a while.

Figure 1-B and C show a concept that is still in use today, in some instruments. This concept is based on a linear sliding movement between two planar surfaces to allow various flow paths, like sample injection and various column switching applications. This design requires a very tight tolerance between surfaces and was limited by the usable fluid pressure. The leak rate was also relatively high, and limited its use to mostly hydrocarbons measurement where atmospheric contamination is generally not a problem . The application was also limited to high level impurity measurement.

Figure 1-D, E and F show the early conical rotary valve concept that has become a standard in the GC industry, as shown in figure 1-H and I.

*: US Pat. #7,503,203 other patents pending

Indeed all these designs use a conical rotor mated into a conical or "V" shape stator. Mechanical pressure is applied on the rotor by the use of a helicoidal spring. Figure 1-E demonstrates the concept of a manual type actuation, while on figure 1-D and F are added the mechanical actuator and timer for automated use. Figure 1-H shows, as far we know, the first valve based on this concept which was made readily available on a large scale for all chromatographers.

The concepts shown in figures 1-D, F and H require that the valve to be removed from the actuator to replace a defective rotor. At the time, it was a common practice to replace rotor in the field when the leak rate was too high. This procedure is still in use today for valve maintenance.

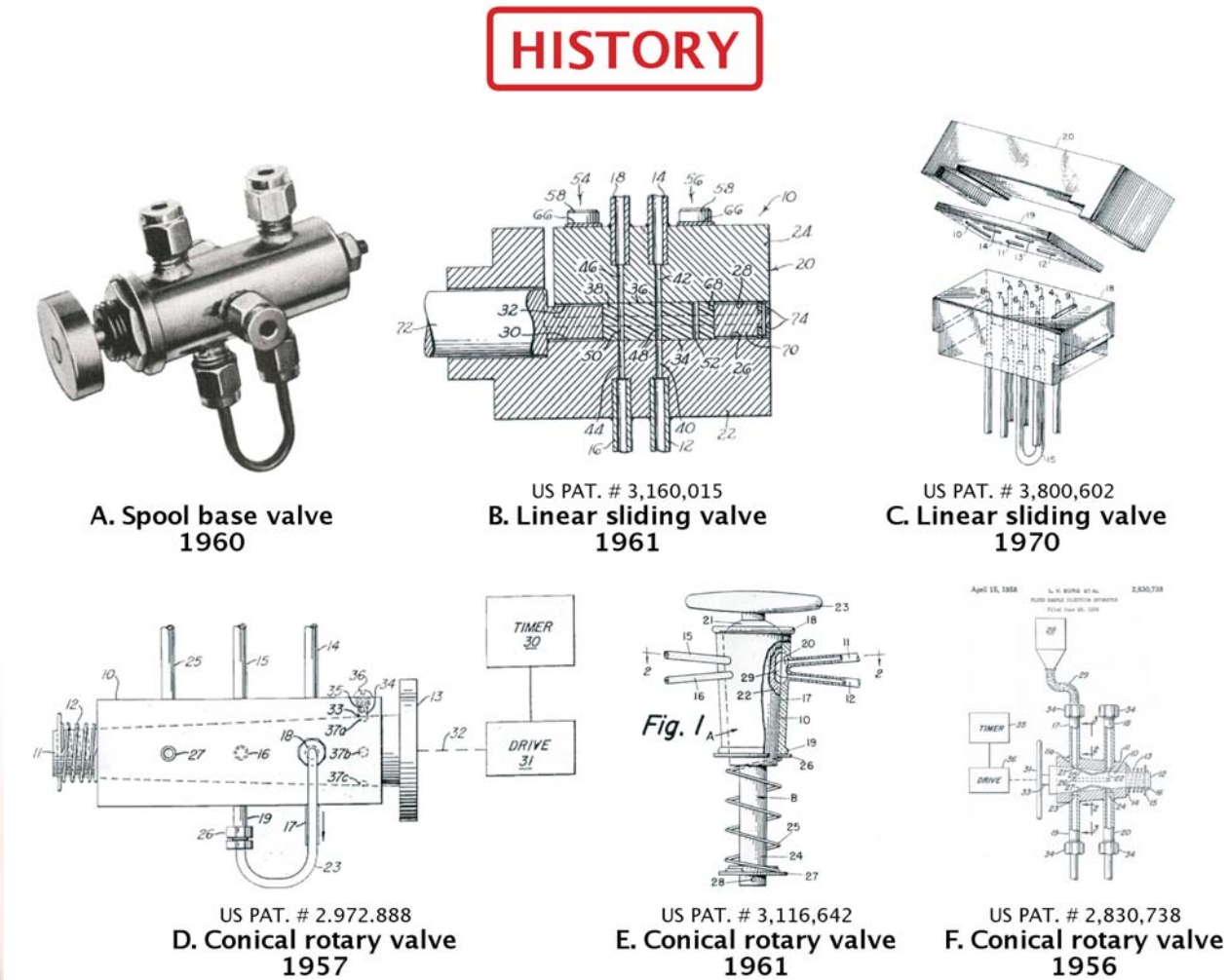

Figure 1

Figure 1 (cont'd)

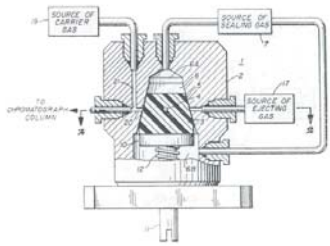

US PAT. # 3,475,950
G.Purge Conical rotary valve
1966

- Carles
- Chandler engineering
- Valco

H. Earlier commercial rotary valve

I. Available commercialy rotary valve

J. Modern Stopcock glass valve

K. Flat rotary valve

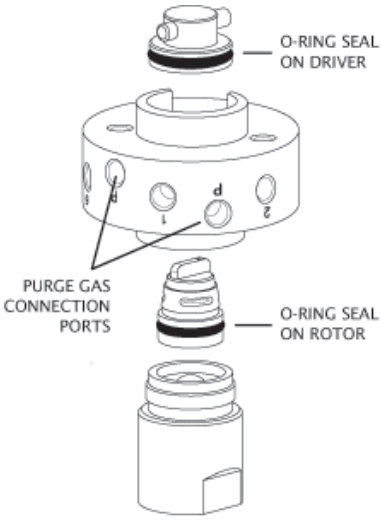

Purge rotary valve with o-ring

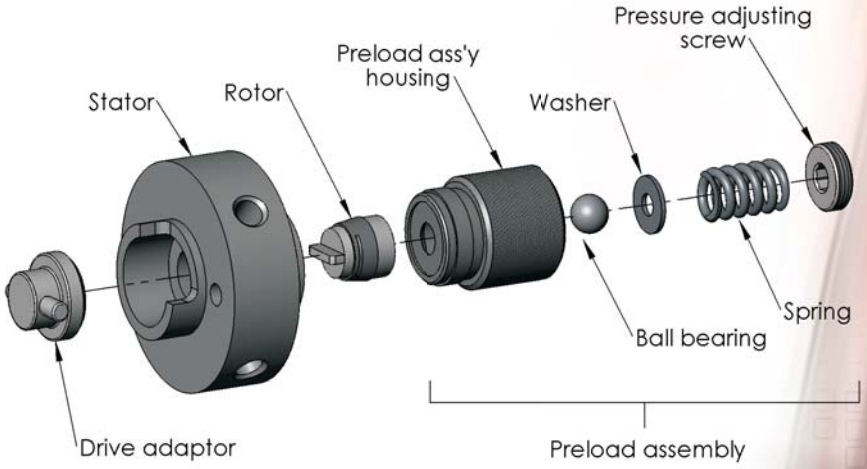

Figure 2:
Exploded view of a typical
unpurged rotary valve

The valve shown in figure 1-I has become a standard in the GC industry and is now seen as a commodity, this version don't need to be removed from the actuator in order to replace the rotor.

The valve in figure 1-G shows an interesting concept. This is, as far we know, the first GC conical rotary valve that introduces a purge gas to eliminate outboard/inboard contamination. A separate source of sealing gas was connected to the valve stator to eliminate the risk of contamination.

Another rotary valve concept was introduced in the 50's that is shown in figure 1K. It is a flat stator/rotor design that was used in early gas chromatographs. The valve body was also purged to eliminate inboard contamination. Such a valve was successfully used in high sensitivity instruments that measure low ppm permanent gases with a high frequency helium discharge detector. However, this flat plate valve used with low molecular weight gas like helium, was limited to a very low pressure operation. This is why a large diameter packed column was used with a very large packing mesh size, between 20 to 30 meshes. To get good resolution, the column length must be quite long i.e. about 4 meters (12 feet) or longer. This results in a bulky system (see ref. [2] Orthodyne Company).

There still are companies manufacturing process GCs that use a flat plate design. Again they are limited to low pressure operation - a serious drawback. Generally speaking, flat plate rotary valves are reserved to the liquid chromatography field. A good HPLC valve will not perform well in gas applications.

Rotary Valve

Basically these valves are made of two parts, the stator and the rotor. The valve is said to be conical because of the rotor's ¨V¨ shape that mates with the stator detail as shown in figure 2. The various designs as shown in figure 1-D to 1-I, could have been inspired by the early glass plug valve or the so-called ¨stopcock plug valve¨ used in laboratory glassware. Such a valve is shown in figure 1-J.

For readers that are curious about the historical aspect of this concept, please refer to REF. (2). Surprisingly, the concept used in the early "stopcock plug valve" is the same used in today's commercially available GC conical rotary valves. The basic idea was already there. This concept dates back from over 50 years.

Many things have been improved by several orders of magnitude in the chromatographic world in these last 50 years. Today's various detectors used in gas chromatographs can measure impurities down to ppb and ppt levels. These detectors combined with powerful software for data processing and high resolution electronic circuits, result in systems capable of real time parallel chromatography, with a sensitivity that was only possible in the chromatographers' dreams 30 or 40 years ago. Unfortunately, if the hardware used to do sample injection and various flow switching functions is not up to the task, all this technological evolution is worth nothing.

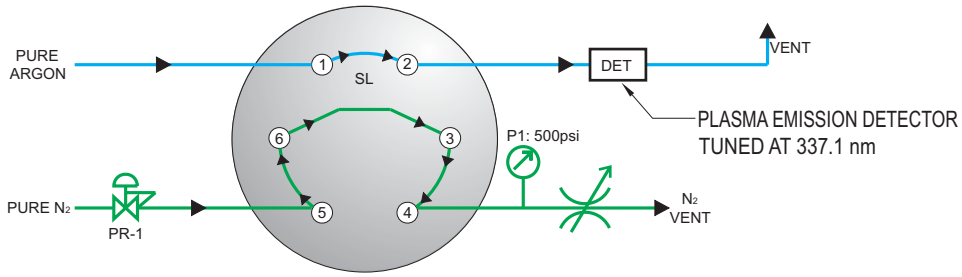

Figure 3: Rotary Valve Leak Testing Test Bench

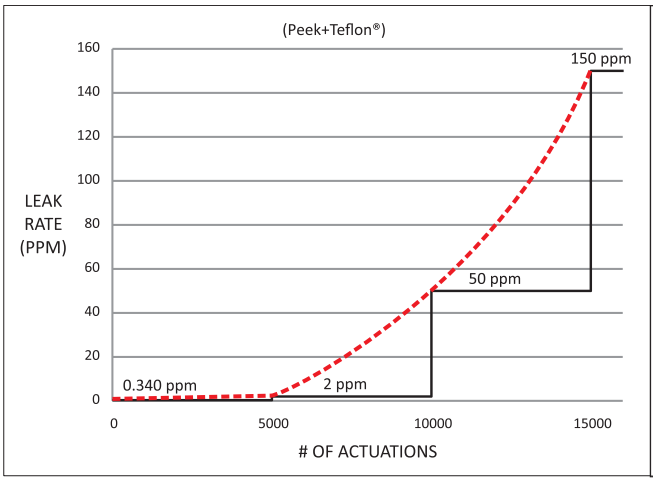

Figure 4A: Valve Performance Test at ambient temperature, 400 psig with standard Peek/Teflon rotors

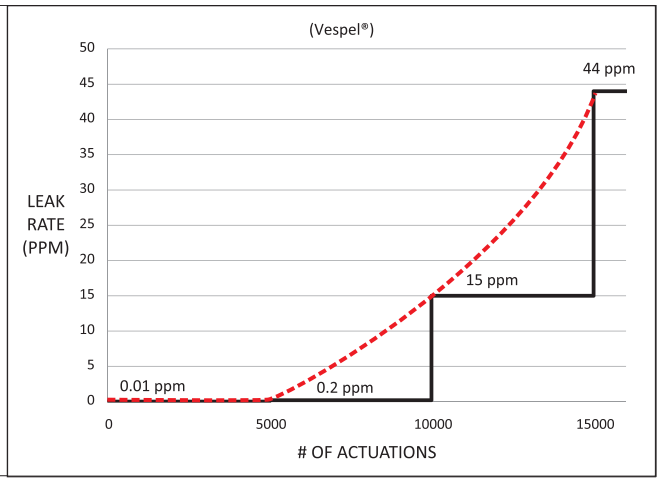

Figure 4B: Valve Performance Test at 300°C, 300 psig with standard Vespel® rotors

Paradoxically, conical rotary valves were commercialized more than 40 years ago and are still today, the workhorse of many GC systems. These valves have been installed in countless systems worldwide. Today, many users are looking for solutions to eliminate various drawbacks from these early rotary valve designs. Some of them, in the attempt to eliminate leaks, have re-introduced the Deans Switch. See ref. [3].

Deans, around 1964, eliminated all flow control valves from the critical fluid flow path. He used a by-pass flow switching control strategy. This, in fact, works very well in many situations. However, this adds complexity and cost to the whole system since secondary control hardware is required.

Existing GC Valve Technology

Performance and Related Problems

A closer look at the existing conical rotary valve performance and design must be taken before analyzing the various solutions we are proposing to improve on.

For the purpose of discussion and to simplify the text, all examples will refer to a standard 6 port conical rotary valve. The typical performance of such valves are shown in figure 4 A-B. Such valves are typically used in GC systems for the measurement of hydrocarbons and **permanent gases**.

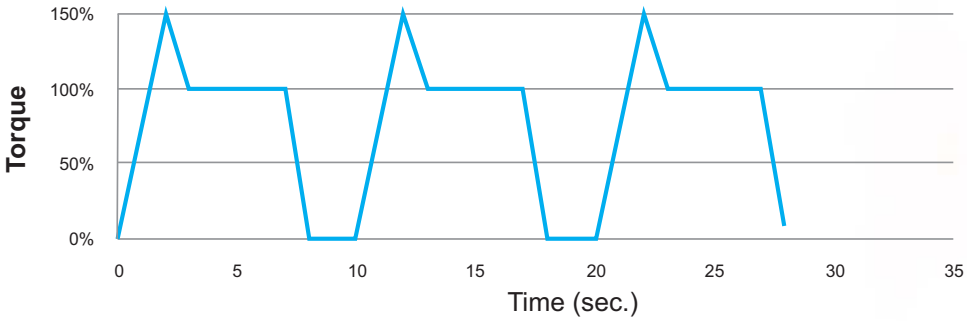

Figure 5: Torque Curve, Stick-Slip Mode

It is a common configuration. Typical mechanical concept is show in Figure 2. The tested rotors are made of untreated Peek/Teflon® or Vespel® for higher temperature application. These valves are not purged. This is the way that typical GC commercial valves are manufactured. The evaluation was done with the Test Bench shown in figure 3. Argon flows at atmospheric pressure through one section of the valve, while the other sections are pressurized with pure N2. The valve is connected to a Plasma Emission Detector tuned to measure the intensity of the N2 emission line at 337.1 nm. Other types of N2 sensitive detectors could also be used. Such systems have found leaks that were undetectable with a helium based mass spectrometer leak detector.

This set up is also very sensitive to measure inboard leakage. Indeed, the valve is surrounded or "immersed" in a "sea" of air, which has about 79% N2. Compared to the 5 ppm of helium normally found in atmospheric air, that the helium mass spec. based leak detector relies on to find such a leak. The N2 as a tracer is more sensitive and the system is much less complex.

This set up is used by AFP® for the leak rate certification of all our valves. The gas is passed through a 0.5 micron particle filter before being introduced to the valve under test. This is to make sure that valve performance test will not be affected by particles being introduced into the valve. This system has 4 to 5 times the sensitivity for leak detection than a standard helium mass spectrometer leak detector, see ref. (4)

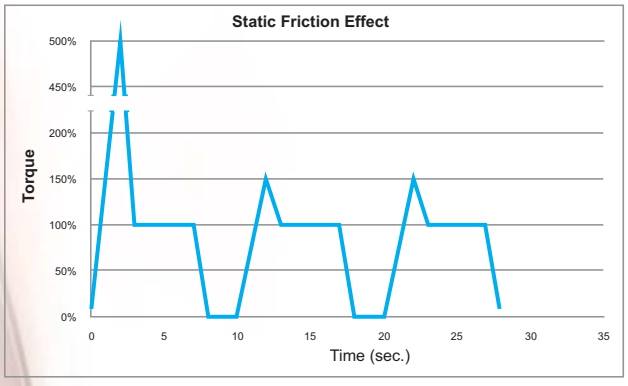

Figure 6: Curve Showing Torque Related to Static Friction

Friction/Adhesion Related Problems

1) Friction (stick-slip mode)

Generally speaking, even in gas chromatography, where the pressure is relatively low, the force required to properly seal the valve is high, as for the friction and wearing. The molecular diameter of helium is about 0.23 nm. The surface finish is never perfect, thus, any microscopic scratches will lead to leaks.

The types of leaks that occur in such valves are most commonly viscous ones. The leak follows a tortuous path which length is greater than cross-sections of the leak channel. Here nitrogen is used as a tracer gas. Nitrogen is less viscous than helium so we will see much better sensitivity, for such leaks. Figure 4A-B show typical performances and working behaviour of two typical GC rotary valves. When new, these valves performed well. Then, after a number of actuations, leaks began to appear. The leaks increased proportionally to the number of actuations. These leaks are caused by the rotor sealing material wearing out due to surface friction and deformation and other mechanical problems.

Wearing is the surface damage or the removal of material from one or both of the two solid surfaces, in a sliding or rotating motion, relative to one another [5]. The removal of material will result in dust and particles that get trapped between the stator and rotor interface, contributing even more to surface damage.

Here we are talking about friction generated by the rotation or sliding movements of the rotor relative to the stator. The torque required to operate the valve is proportional to the friction level. Figure 5 shows a typical GC rotary valve torque curve at ambient temperature.

These curves follow the typical stick-slip friction behaviour of solid sliding surfaces, as described by the laws of tribology. First, when the valve is at rest, a higher torque must be applied to start the rotor in motion (stick part of the curve) and then suddenly the rotor begins to move, the required torque decreases. This is the slip mode.

When a valve is continuously cycled, as in a process chromatograph, where the instrument is operated 24 hrs/day, this is the way friction will be observed, and also the wear associated with it. This will eventually lead to the performances shown in figure 4A- B. This is the normal behaviour of a typical conical rotary valve. This is a well known facts by peoples involved in this field, and have been reported by many valves users.

2) Static Friction
My Valve Doesn't Turn

The static friction phenomenon is too often overlooked and not well understood by many valve users. Static friction must be addressed as soon as the valve is installed in a system. If not addressed, static friction will have a dramatic impact on a valve's lifetime. Static friction could be described as the increase in torque required to turn the valve for the first time when installed in a system. This problem is more evident when valves have been at rest for a long period of time. This is normally the case when a valve is shipped from the manufacturer and stored in the customer's warehouse for an undetermined period of time before using it.

The mechanism underlying the phenomenon is far beyond the scope of this paper, but users must know how to address this issue to avoid permanent damage. Static friction is often referred to and reported by the user as a ¨sticking¨ or ¨bonded¨ rotor, since the valve rotor appears to be almost ¨welded¨ and locked to the stator.

Operating valves in such conditions may result in permanent damage. In some cases, the rotor sealing material will break apart.

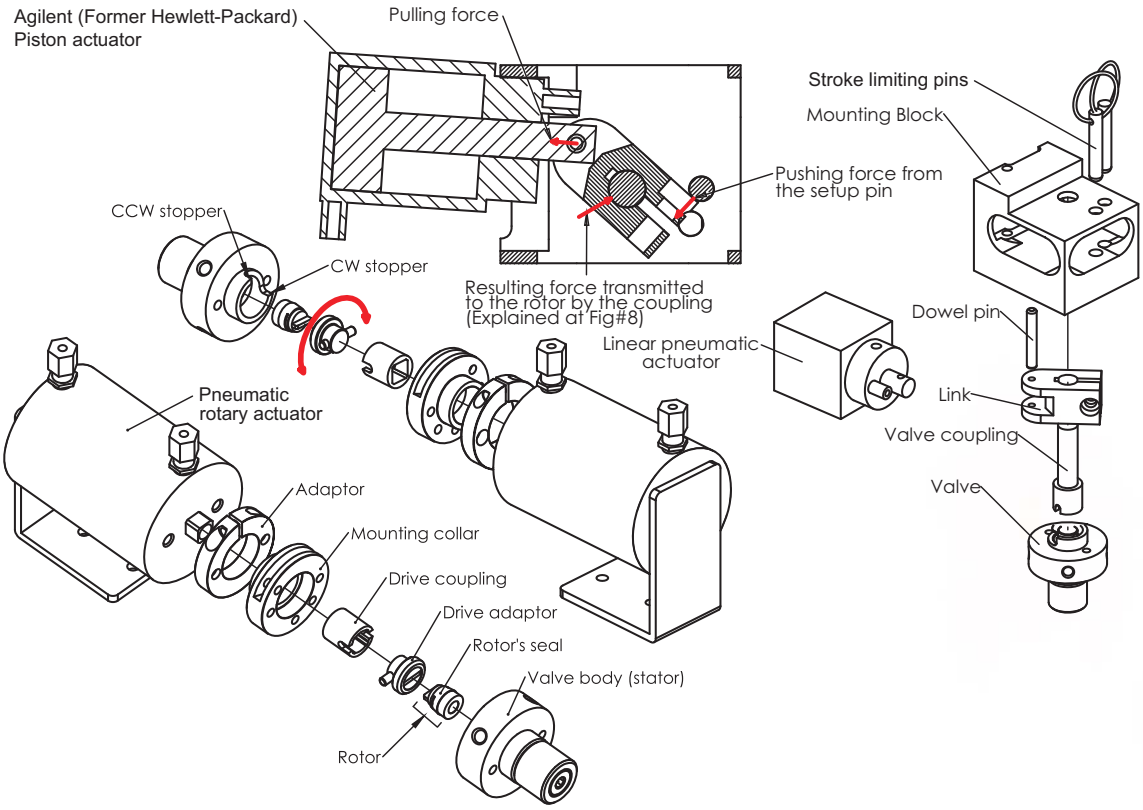

Figure 7: Actuating a G.C. Rotary Valve (Rotary and piston type)

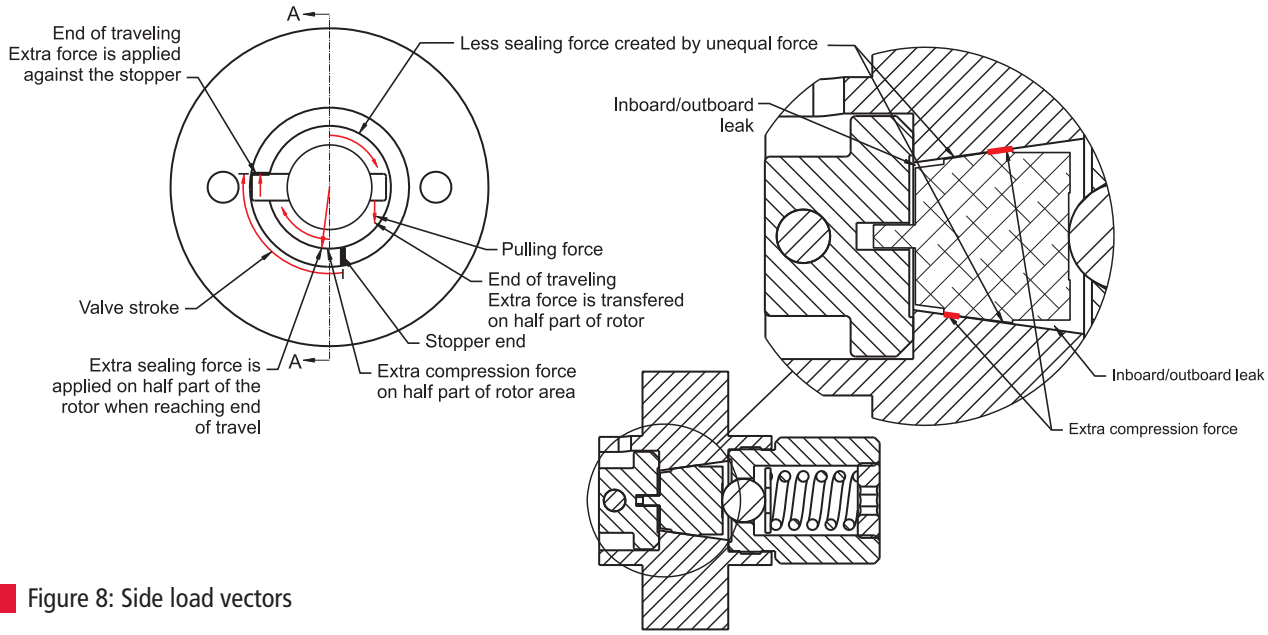

Figure 8: Side load vectors

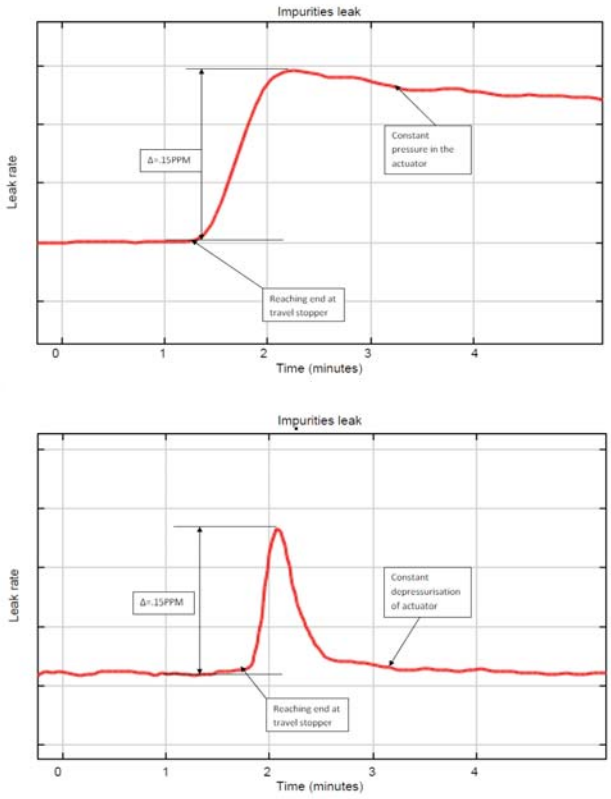

Figure 9: Leak generate by side load effect on rotor

To overcome this situation, a temperature treatment is recommended when replacing such rotor. Temperatures of 300 to 350° C are common for this "heat" or "conditioning" treatment (HT valves ONLY). Some rotor materials will exhibit a higher static friction phenomena (like PPS). Rotor materials are application dependent. As a remedy, it is a common and good practice to include such heat treatment procedures in the operation of a GC that has been at rest for a certain period of time.

On the molecular side, an increase in temperature raises the energy level of molecules at the interface making it easier to break the adhesion barrier. Still increasing the temperature makes the rotor material softer, resulting in a glaze type finish, reducing the torque required to rotate it. However, after some time, heat cycling the valve is necessary to restore the required torque to a safe level. There are also some materials that cannot be used at ambient temperatures without an unacceptable increase in torque.

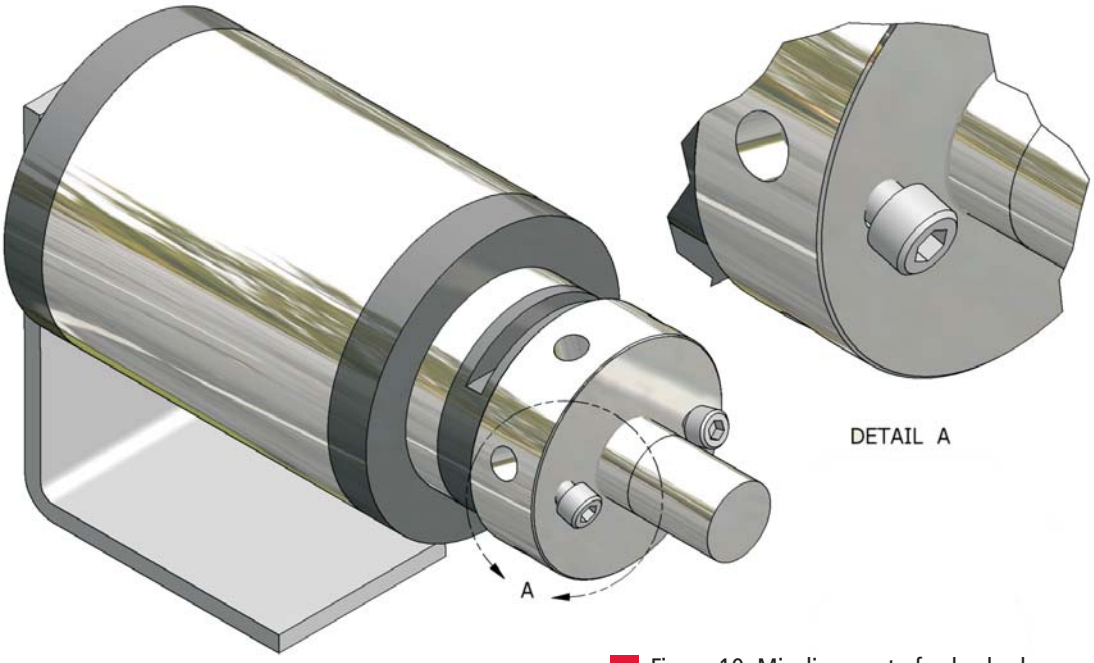

Figure 10: Misalignment of valve body on pneumatic rotary actuator, holding screws twisted

Generally manufacturers specify the working operating temperatures. In some cases, this has a negative impact on operations, since heat conditioning requires that the equipment be shut down or at least, put in standby mode. Furthermore, it is not always feasible to operate the valve at a temperature where the static friction is lower, and this for mechanical or chemical reasons, or where there is a risk of affecting the nature of the sample.

Note:

Valves used in liquid applications (like liquid phase hydrocarbons sample) will seem to work for a longer period of time due to lubrification generated by the creation of a liquid film. This phenomenon doesn't exist in gas applications.

Actuation and Alignment Related Problems

1) Unequal Force Transfer To The Rotor

Another problem with the existing technology is the unequal and undesirable forces transferred to the rotor. This problem (side loading) is generally unknown by many valve users, so no actions are taken by them to overcome it. This problem is dependent on how the valve is actuated. Figure 7 shows two popular ways to actuate a GC rotary valve. The problem is caused by the radial force transferred to the rotor.

The resulting force tends to compress the sealing material on one side, while decreasing the sealing force on the opposite side. This is shown in figure 8, while figure 9 shows the leak generated by this problem.

Another source of problems resulting from the use of the standard and well known rotary pneumatic actuator, is the gradual increase of misalignment of the valve body relative to the mounting mechanism. This can be seen in figure 10.

Over time, when the rotor becomes more difficult to turn, the two valve mounting screws bend. When this happens, the valve body tilts when it is actuated. This contributes to the radial forces being transferred to the rotor. Some users have reported that the rotor cannot reach its final position because the valve body also rotates upon actuation. This leads to an incomplete rotor travel, which causes flow problems.

Many chromatographers have also reported that the wearing of the valve stopper's edge creates flow problems. Because the stopper becomes engraved after repeated use, it results in an increased rotation angle. The position of the rotor grooves relative to the valve's body port, which is now changed. An increase in pressure drop and even flow interruption has been reported. These problems are also due to the over-torque action of the various existing rotary actuators.

The more the valve is actuated, the greater the leak will be over this period of use. This is indicated in figure 4 A-B. The levels of leak shown in figure 4 A-B are for gas molecules, which are generally of a smaller diameter and lower viscosity compared to liquids. This is probably the worst case for leaks, mainly viscosity related leaks.

Such valve performance is acceptable for many liquid applications, even at high pressure. Also some GC applications will tolerate such a leak, without really affecting the analytical result. This is the case where atmospheric contamination does not affect the detector performance, as with an FID. Notice that figure 4 A-B show a cross-port leak relative to the time of use. However, inboard /outboard leaks are also increasing. Applications where the sample must be pressurized will suffer from such cross-port leaks. The carrier will become polluted by the sample, jeopardizing system separation, resolution and sensitivity.

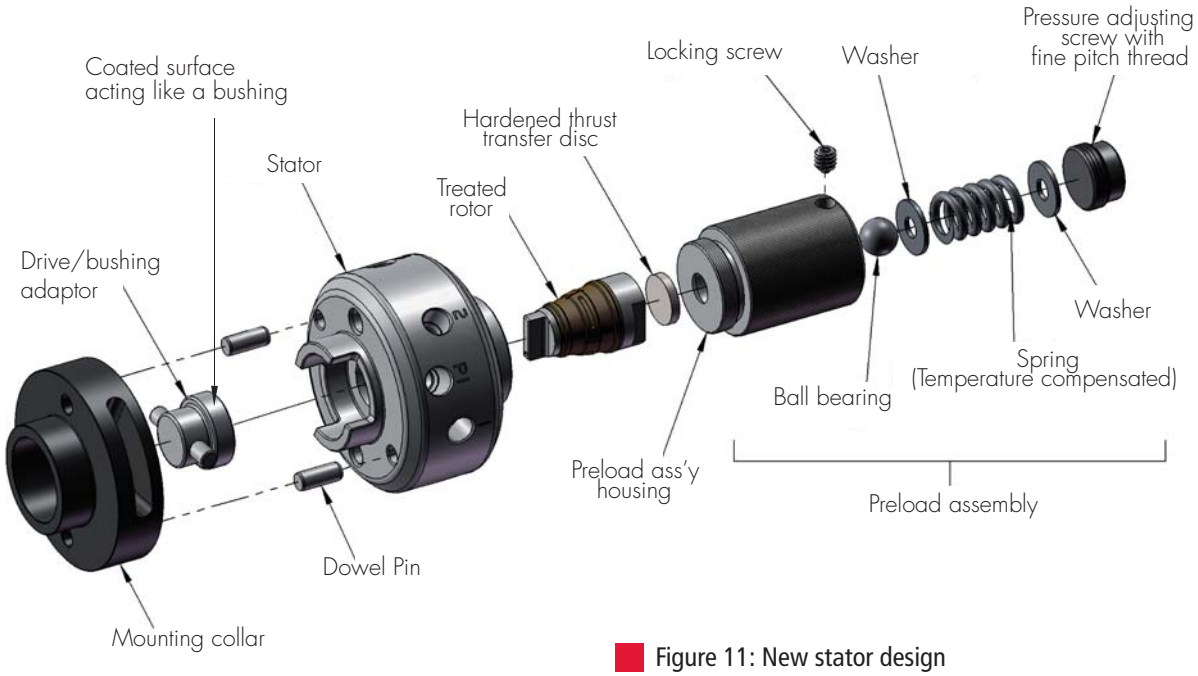

Figure 11: New stator design

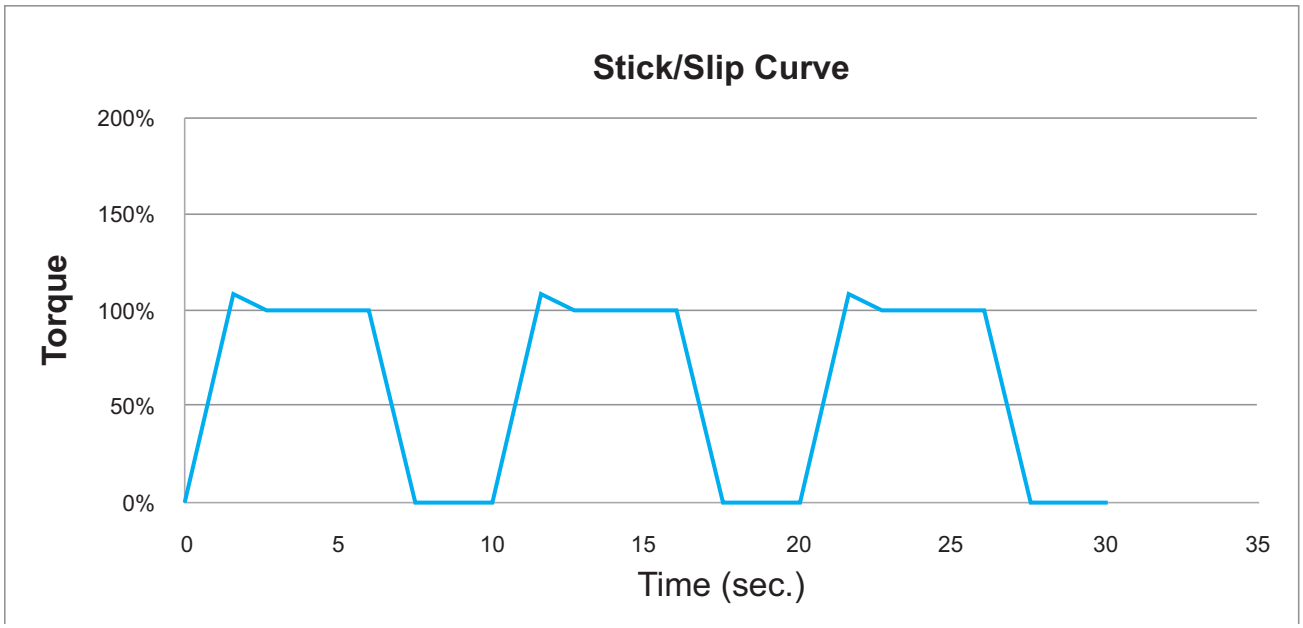

Figure 12: Typical stick/slip torque curve of the new G type rotor

Valve Stator - New Concept and New Method

Most of the problems referred in part 1 of this paper are in fact, mechanical design related problems. So, our first step to improve valve system's performance, was to eliminate or reduce the negative impact caused by the existing mechanical design.

The stator was redesigned as shown in figure 11. These newly designed stators address some of the problems cited in part 1, i.e. elimination or reduction of the detrimental forces transferred to the rotor. Figure 11 shows that a drive/bushing adaptor has a tight fit and special coating on its external circumference. This drive/bushing design act as a bearing. Furthermore, the stator body has been modified to accept a longer drive adaptor pin resulting in a double stopper design.

The drive/bushing drastically reduces the unwanted radial load on the rotor. Piston type actuators can now be used without really affecting the rotor's sealing ability. The side loading is taken by the drive/bushing, not by the rotor. The actuating force is not transferred to the rotor even when the drive pin hits the stops.

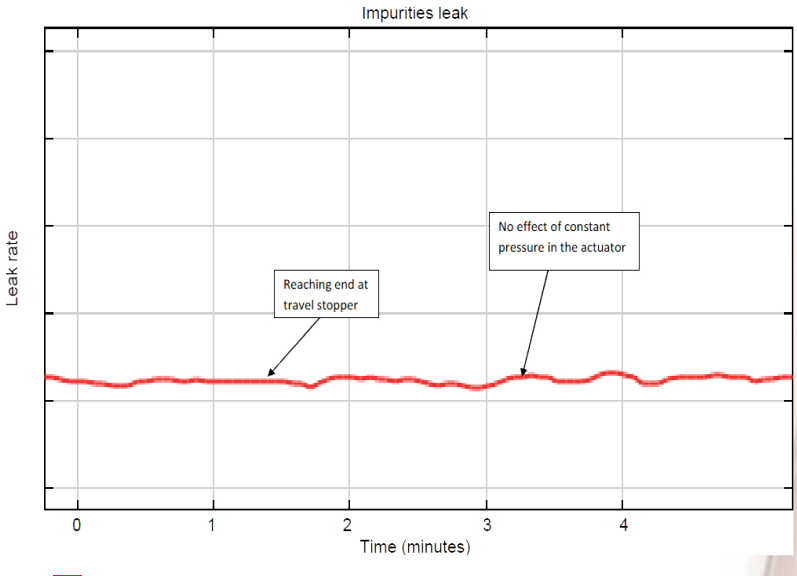

Figure 13: Performance of the improve design in over torque situation. Valve mounted in on AFP PNC pneumatic actuator.

The AFP® drive pin extends an equal distance on both sides of the driver to contact both stops on the stator at the same time. Thus evenly distributing the force between the stops.

The rotational force on the valve mounting screws is eliminated by the addition of two dowel pin alignment holes in the valve stator body. When the valve is installed on the mounting collar of the pneumatic rotary actuator, the dowel pins are used to eliminate the unwanted valve body rotation.

This eliminates the bending of the mounting screws that in turn, damages the rotor by increased friction and increased wear. It also eliminates the engraving of the stopper edge, which causes rotor misalignment relative to the stator's ports.

Housing

The preload assembly has been modified as shown in figure 11, and has been made longer to accommodate a locking screw that secures the thrust force adjusting screw. Moreover, the pressure adjusting screw has a fine pitch thread instead of a coarse thread like the existing models. This allows a better and smoother tuning of the mechanical pressure on the rotor. Finally, the spring will have a constant compressive force for all temperature spans of the valve. This temperature compensation makes sure that proper force is applied on the rotor at all temperatures.

New Rotor Design

The static friction has been further decreased by exposing the rotor material to a special proprietary surface treatment. This reduces the adhesion phenomenon and makes the rotor easier to turn. This also allows for a reduction in the spring tension on the rotor, while keeping the same level of sealing.

The "G" Type Rotor, figure 14-A

Figure 12 shows a typical torque stick-slip curve for our G type rotor, which is a 6 ports valve. Less mechanical pressure on the rotor means less friction and obviously less wear. Figure 12 shows a net improvement over figure 5. Reducing the operating torque also increases the life of the rotor and the actuator.

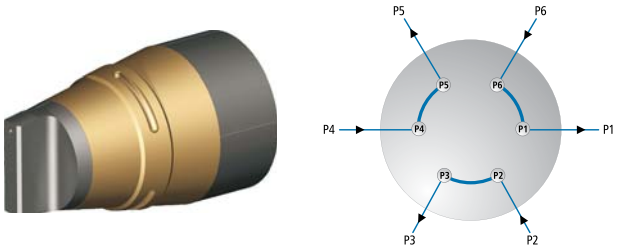

Figure 14-A: The ¨G¨ series designed as drop-in replacement for the competition's products. The target market is the replacement of the existing valve already in daily use in the field.

It is a well known fact that leaving a conical rotary valve partially actuated, i.e. having all port flows interrupted, will cause damage to the valve. This is caused by the rotor polymer sealing material being extruded into the stator's valve holes or ports.

Figure 14-B: The ¨OLP¨ series is our own design and provides extra ports and purging grooves providing a barrier for inboard and outboard contamination. This design eliminates the need for a seperate purge housing to preserve system purity. However when gases in use are hazardous, it is recommended to use extra precaution for user's safety.

When this happens and the valve rotation is re-started, the rotor will become engraved and particles will be generated. Valve leak rates will dramatically increase.

Our proprietary surface treatment reduces the overall torque required to operate the valve, since there is less friction. This means a lighter preload assembly setting is required. This will result in less mechanical force pushing down the rotor, leading to a reduction or even a cancellation of an extruding effect. The valves have been left in mid-position for an extended period of time without any noticeable effects.

Now, using the new valve assembly, i.e. new stator design and a G type rotor, the over- torque test is repeated. The result is shown in figure 13. This shows the benefit of the double stopper and bushing drive adaptor design and a net improvement over figure 9.

Rotor Design - One Size Does Not Fit All

The above described improvements are now working very well, however, we improved the rotor design further, in order to get a better leak and sealing performance. This was done by machining a purge flow path into the valve rotor, a patented feature.

The "OLP" Type Rotor, figure 14-B

The use of a rotary conical valve with high purity helium, high sensitivity detector such as a PDID, has had its share of problems. There is always ambient air diffusing into the process groove. The atmospheric air infiltrates around the rotor when the valve is rotating. Many users mount their valves in a sealed purge housing to eliminate this contamination.

To overcome this problem we machined two extra grooves on the rotor. These two grooves surround the process groove. When a purge gas, normally the carrier gas is flowing in these grooves, the process groove becomes isolated from the outside world. Any leak, surface diffusion or permeation is vented away through the purge outlet. Proper adjustment of the purge flow and pressure will eliminate any possibilities of contamination. This extra feature also eliminates the need for a bulky purge box.

Figure 15-A: The "CLP-D" series has the same purging groove as the OLP series and also extra purging grooves between rotor grooves to add protection against cross-port leaks when the valve is at rest.

This rotor is the ¨OLP¨ type rotor. In order to use the ¨OLP¨ in our improved valve stator, two ports were added to the valve body. Extra ports are required to allow purge gas to flow in and out of the rotor purge grooves. See figure 14-B for the purge gas flow path and the equivalent schematic. This rotor configuration works extremely well for vacuum applications (GC/MS). Any leak of atmospheric air, is diverted into the purge grooves, and is evacuated.

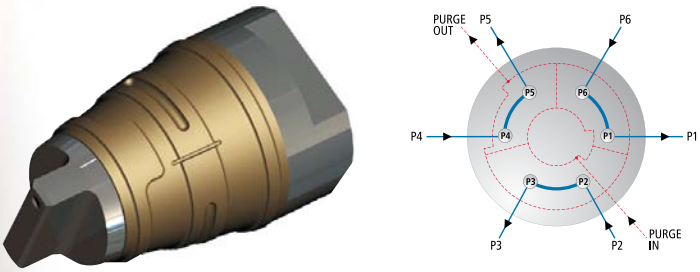

Figure 15-B: The ¨CLP-S¨ series has the same purging grooves as the OLP series and also extra purging grooves between rotor grooves for more protection against cross-port leaks when the valve is at rest, but the purge flow is interrupted when the valve is actuated.

The "CLP" Type Rotor

The ¨OLP¨ type rotor design succeeds in eliminating inboard/outboard contamination. However, we modified it to address the cross-port leak problem; which will eventually happen during a rotary valve's lifetime. Although we succeed in reducing friction between rotor and stator, there will still be some wear. Therefore, we designed the "CLP" type rotor. This will make a big difference. The "CLP" type rotor is available in two versions, i.e. "CLP-D" and "CLP-S".

The "CLP-D" Type Rotor (Dynamic) figure 15-A

This type of rotor shown in figure 15-A is the ¨CLP-D¨ type. The ¨D¨ stands for dynamic. This means that there is a continuous purge flow at all time into the system. The "CLP" type rotor is simply a ¨OLP¨ type with extra purging grooves between the process grooves. So, each process groove is isolated by a purge groove.

Any leak developing over time between any of the process grooves will be simply carried away by these new purge grooves. There is another bonus with this groove. Each time the valve is actuated, these purge grooves clean the stator surface evacuating dust particle that could build-up over the time.

These extra grooves will in fact extend the lifetime of the valve. In an HPLC application one could use a solvent to provide a washing action on the stator to decrease the carry-over effect and particle built-up.

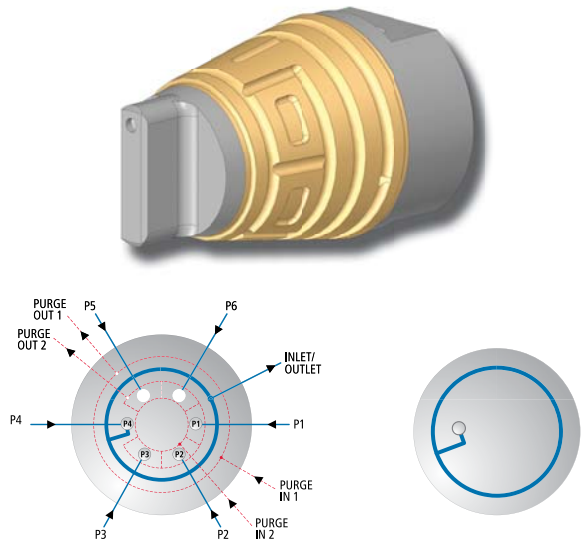

Figure 16: The ¨S¨ series is a rotary sampling valve with purging grooves which surround the unselected ports. It prevents the contamination of the selected ports from any unselected port fluid. It also has the inboard/outboard contamination purging groove protection.

These purging grooves are done vertically in the rotor. See figure 15 A-B. They are machined at a special angle relative to each other. This is done to make sure that there will be only one purging groove at a time that crosses a stator's port. This means that when the valve is actuated, there will be a little bit of carrier that will suddenly flow into the purge. In the same manner there will also be a part of the sample fluid that will flow into the purge. However, they will NEVER mix, since there is only one port in contact with the purge grooves at a time. Since the valve rotation time is relatively short, this has very little impact, if any, on most applications.

The "CLP-S" Type Rotor (Static), figure 15-B

The main difference between the ¨S¨ version and the ¨D¨ is that in the ¨S¨ version, the purge flow is interrupted when the valve is actuated. The rotor is designed in a way, that when it rotates, the inlet and outlet purge ports are closed. The purge flow is allowed only when the valve is in its final position. See figure15-B. The ¨S¨ stands for static. This way, when the purging grooves cross one port, there will be no flow from that port through the purge vent. It makes sense when the samples are pressurized liquids like high pressure hydrocarbons. Some other applications can also benefit from this feature.

The "S" Type Rotor (Selection), figure 16

The "S" series is a sample stream selection rotary valve. The rotor has a built in protection against inboard and outboard contamination. There are also extra grooves to allow the isolation between various selections, see figure 16. The "S" type rotor allows a longer working period in variable temperature conditions. This is another patented feature.

Furthermore, when working with high sensitivity detectors with low molecular weight gas, such as helium as the carrier gas, this purging/sealing groove is normally fed by the carrier gas. The purging gas pressure and the flow are normally adjusted to compensate for long term wear.

Rotor Materials

Many rotor seal materials have been used since the 1960s and most of them are still available.

The parameters governing material selection are; temperature, inertness and tribology i.e. friction related factors. For high temperature operation, a polyimide base material is a mandatory choice.

Normally, a filler is added to the base material for reinforcement. Such a filler could be glass fiber, carbon fiber, Kevlar®, (aramid). The filler must be carefully selected in order to avoid stator abrasion.

To reduce friction, a third component is normally added to provide lubrication. The typical agents are PTFE (Teflon®), graphite or silicone resins. For example Vespel® (polyimide based blend) is generally used for high temperature applications. Normally to get better lubrification effect, the lubrifiant should be used at high temperature to allow the antifriction or lubrification ingredient to migrate to the surface. This creates a lubrication film between the stator and the rotor interface. Although it is generally understood that the valve does not have any lubrication, the wear resistant additives have the same effect. When such additive is used, a close examination of the stator surface reveals a lubricating film deposition.

Proper material selection with our proprietary surface treatment will result in a valve requiring less torque to operate. Actually we have reduced the type of rotor seal material to three choices. First, there is a PEEK base for low temperature, second, there is a polyimide base for high temperature and third, there is a polyphenylene sulphide (PPS) for applications requiring the highest level of inertness. Table 1 summarizes the 4 different choices. Other material can be supplied on request. Teflon® material is not recommended when the detector is an electron capture type i.e. ECD.

However, our proprietary surface treatment allows the use of Vespel® seal material at ambient temperature, eleminating the need of peek base material for ambient temperature.

Note:
The final application governs the selection of the proper valve seal material. It is always a good practice to test a selected valve in the target application before using it routinely. Furthermore AFP® offers various rotor purge flow paths. Compatibility for any particular application could be confirmed simply by testing it.

Valve Final Assembly

Once the stator and rotor have passed the quality testing, the rotor is installed into the stator, then the preload assembly is screwed into the stator body while having the pressure adjusting screw set at minimum. There is hardly any pressure applied on the rotor. This is done in a clean environment, and the valve assembly is then installed into a Test Bench similar to the one shown in figure 3.

The valve gas flow is set to high velocity. The valve is actuated many times under these conditions, while adjusting the preload assembly pressure adjusting screw to a pre-determined torque value. At this torque value, there are almost no leaks under the specified operating parameters. At this particular moment, the valve will be exposed to a temperature treatment. At some specific point during this treatment, the valve is also actuated for a number of cycles; leak performance is checked and the preload assembly is fine tunes as necessary. The valve is then cooled down. The pressure adjusting screw's locking screw is installed to avoid any unwanted rotation of the pressure adjusting screw.

The valve will be cycled and monitored while still installed in the test bench. When this process is completed the valve is ready. All ports are plugged, the preload assembly is then sealed and locked into its position. The preload assembly cannot be removed without breaking these seals. See figure 17. One cannot open or replace the rotor without breaking these seals - this voids the warranty if opened.

Table 1: standards materials available

	Gasoline	Strong Acids	Strong Bases	Hydrocarbons	Oxidizing Agents	Alcohols	Ketones	Esters	Steam	Max. Continuous Temperature
AFP® PTFE	E	E	E	E	E	E	E	E	E	200°C
AFP® PEEK	E	F	E	E	F	E	E	E	E	225°C
AFP® Polyimide	F	F	N	G	N	E	G	E	N	260°C*
AFP® PPS	E	G	E	E	G	E	E	E	G	175°C

E : Excellent G : Good F : Fair N : Not Recommended *350°C short exposure

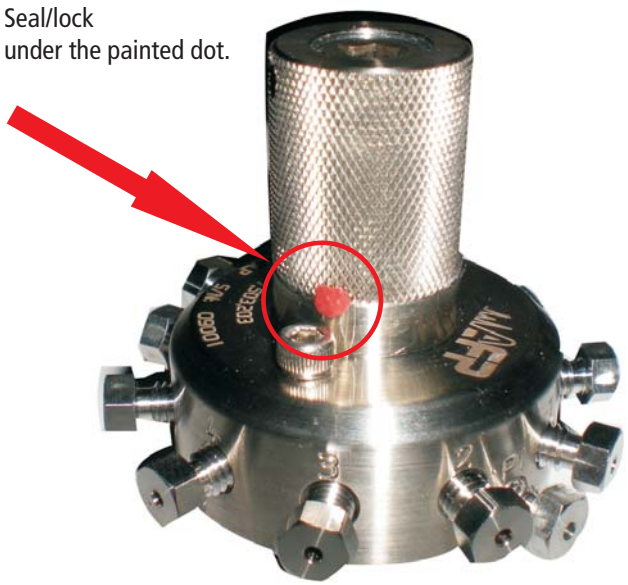

Figure 17: Rotary valve seal, under the red dot.

The valve should never require disassembly during the period of warranty. Doing so will void the warranty as it changes the factory tuning and ruins the valve performance. It may seem like quite a drastic step, but the way our rotary valves are assembled assures that the rotor fits and mates perfectly to the stator conical surface. This is done in a highly skilled manner, in order to bring to the rotor's surface a thin film or lubrification layer that acts as an adhesion barrier while filling the microscopic pores. This CANNOT be done in the field.

Removing the rotor from the valve and manipulating it, touching it with your fingers or contaminating it with any other materials will drastically reduce valve performance and its lifetime. The user will now have to over-torque the valve, in order to attempt getting an acceptable leak rate. The torque will be increased and the valve's performance will decrease.

Some people are used to replace a low temperature rotor by a high temperature one or vice-versa. The reason why changes are done, is because a high temperature rotor could not operate below 150°C with the existing technology and obviously a low temperature could not be operated at a high temperature. This was a good reason to allow rotor replacement.

However, as explained in the previous section, our proprietary surface treatment will allow high temperature rotors like a Vespel® polymer blend, to be operated at ambient temperature without the adhesion phenomenon. Therfore, there no need to replace the rotor type when changing temperature. Valves can also remain at rest for long periods of time without the adhesion phenomenon. Surface treatment or modification could be in some cases done on both stators and rotors at same time.

Valve Maintenance/Rotor Replacement

It has been generally accepted in the industry, to simply replace the rotor in the field when the leak rate becomes too high, or when the rotor became too difficult to rotate. It must be noted that just after the rotor has been replaced, the valve leak rate will be much lower, along with the torque required to actuate the valve. However, this situation will be short-lived and the rotor replacement or preload assembly adjustment will have to be done in a relatively shorter time interval compared to first time. Constant replacing will also increase the interventions and maintenance frequency until it becomes necessary to replace the valve with a new one. At this moment, the valve should be discarded.

Replacing a rotor in a valve that is still installed in an instrument, could lead to problems. When a rotor needs to be replaced, it is because it is worn or damaged. The rotor is generally dirty and scratched, giving new flow paths for leaks. As for the rotor, the stator also needs to be cleaned and inspected. Cleaning the stator in the instrument could result in valve port contamination. It is not possible to properly clean valve ports when the tubing is connected. It is possible that dirt gets pushed into the ports. Then, once the new rotor is installed and the flow is restored, there is a good chance of reintroducing particles or fine dust into the valve. Furthermore, proper inspection of valve's stator is difficult when the valve body is inside an oven.

Analytical Flow Products does not recommend field replacement of the rotor as it is impossible to recreate the factory's specifications. However, installation procedures are included in the rotary valve's user's instructions see ref. [7]. As we indicated earlier, AFP rotary valves should not require rotor replacement during the warranty period; in fact they will last longer than this period - depending on your usage. This is true if the valve is used at or below maximum rated specifications. The exact life time is always difficult to predict, since this really depends on several factors; such as fluid type, pressure, temperature, detector sensitivity and the application itself. For example, some samples are aggressive or corrosive, some others will precipitate solids under specific operating conditions.

In some cases the valve needs to be operated at 350°C. High temperature rotor materials (Vespel®) are not specified at this temperature. In fact, most of them are not specified to be used at a temperature over 260°C. This is true for ours and also true for the competition products. The effect of creep becomes a problem with Vespel® at a temperature higher than 260°C. See ref. [8] and [9]. Thermal stability is also a problem under these conditions. See ref.[10].

Even with this temperature limitation, you may operate the valve (with Vespel®) rotor at temperature up to 350°C, with some considerations. First you must limit the number of actuation done at a temperature higher than 260°C. The valve will work, but the creep factor becomes an important limitation. Indeed, the creep may be defined as material softening. So, actuating a valve at this temperature will result in surface change and deformation. This can be seen when inspecting the rotor; the grooves become smaller since the rotor material is displaced into the groove. If the valve is maintained between two positions under these conditions, the rotor material will be extruded into the valve ports. When the valve is rotated, permanent damage will occur. This is the main reason why valve manufacturers do not recommend leaving the valve between two positions - it is the high temperature limit of the material in use.

There are some applications that will tolerate valves that have leak rates that is by far too high for other applications. The user's judgment and proper analysis of the application is very important.

How your valves are feeling?

A great built-in benefit of the purge is the ability to use it to get a real time diagnostic picture of the valve's health. This adds some intelligence and an "early warning" to the system. By sampling the purge periodically, it is possible to compare it with the quality of the carrier gas. If there is too much of a difference, it means the valve is leaking.

This early warning can generate an alarm and a repair can be arranged to avoid an unplanned instrument shut down. The sampling period can be set on a daily basis, a weekly basis or any time period that the application may require. The purge gas should be monitored when the valve is in its final position. You must allow a certain delay before sampling to make sure the purge system is stabilized.

When there are several valves on a system their purge may be connected in series, if the carrier gas supply is a problem. However, connecting them in parallel is better when trying to find the source of the leak. There are different possible configurations to verify the quality of the purge. An inexpensive TCD could be used as shown in figure 18. A DV-3, a three-way diaphragm valve is used to re- direct the purge's gas outlet to the TCD. When done this way, the TCD is connected back to the carrier gas. Based on differences between the two readings of figure 18, a warning will be issued.

Another configuration allows re-directing the purge gas into the sampling loop. Since, the purge gas is often the same as the carrier, just injecting it into an analytical column and observing the chromatogram will give the quality of the purge and the valve's health.

There are other methods to monitor the quality of the purge gas vent and to report the valve's status. See application note AN-04 for more suggestions. See ref [6].In all cases, using one or more DV-3 three-way AFP® analytical switching valves makes it easier to realize this task. See the DV series product literature for more details. This switching valve is the first real analytical three-way valve. It has the equivalent effect of a simple 1/16¨union. There are no dead volume effects and no contamination.

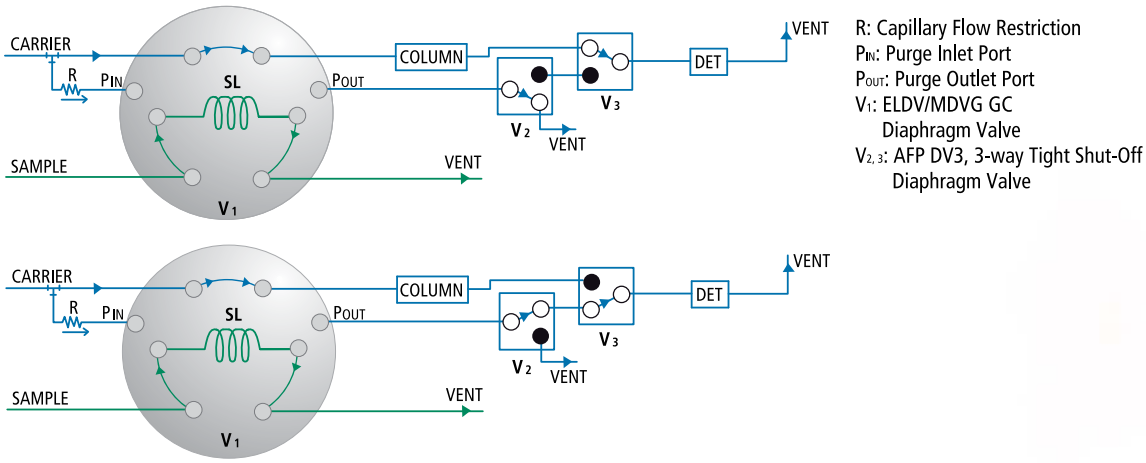

*See application note AN-04 for more suggestions

Figure 18: Self Diagnostic Application example

A Better Way to Actuate Your Valve With Better Performance

Although our new valve stator design can make use of existing actuators, there is still a need for an actuator that will not overload the valve, eliminating the problem at the source. To accomplish this, the actuator must be able to limit its stroke or its final position. This will prevent the stopper edge from wearing when the driver adaptor pin constantly hits it. To this end, we designed two types of actuators, a pneumatic and an electric model. The pneumatic model is presented in figure 19.

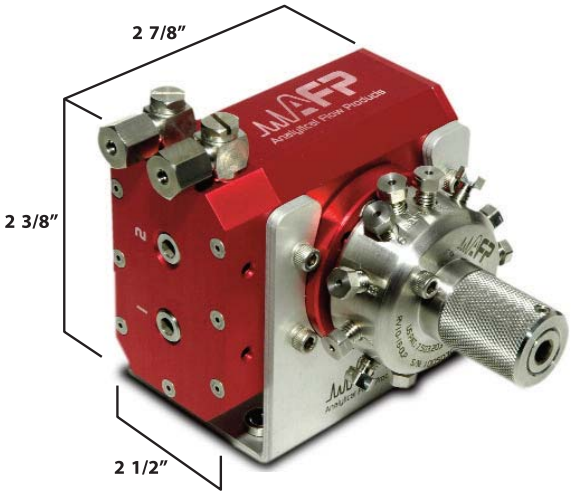

Figure 19: AFP® Pneumatic Rotary Actuator PNC-Series

Pneumatic Actuator (PNC-Series)

This actuator has been tested up to 5 million cycles. There are two adjustable stoppers that ensure that the valve is never overloaded. This totally eliminates any side loading on the rotor sealing material. Furthermore, two miniature proximity sensors can be fitted into the actuator. This is sometimes required to indicate the valve's position.

Different size standoffs and mounting brackets are also available. This is useful when the valve must be installed inside an oven. The valve mounting collar is designed to be used with the anti-rotation dowel pins. Please see the PNC actuator product literature for all details.

Mini Electrical Rotary Actuator (MEA-Series)

The mini electrical actuator shown in figure 20 achieves the same goals as the Pneumatic Actuator, but obviously the driving force is electricity.

This model has its own microcontroller that can be programmed in different ways.

For example, when used with any two position type valve, the actuator will, at power up, locate and record the valve's ending positions. Counts will be subtracted from the recorded count position. This is to make sure that the actuator will never hit the driver's adaptor's pin's ends on the valve's stopper edges. This is one possible configuration. The same electrical actuator can also be used for multi- position valves like a sample stream selection application. Serial communication can be used to configure and control the actuation. It is also possible to use a simple switch or dry contact relay.

The position can also be reported through serial port or BCD encoding format. A special software makes it easy to customize the configuration for various interfaces. Please see the MEA actuator product literature for all details.

These actuators are simply the best way to actuate a conical rotary valve. Only rotational force is transmitted to the rotor, no radial forces, no side-loadings.

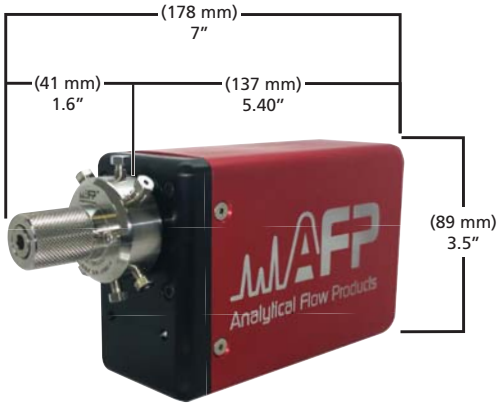

Figure 20: AFP® Mini Electrical Rotary Actuator, MEA series (Right angle drive available)

Figure 21: AFP® Mini Rotary Valve

Conclusion:

New Design Performance

Several tests have been done at the rated pressures and temperature and the leak rate trends have been measured with the test bench shown in figure 3, then plotted. Obviously valves used at lower working pressures will have lower leak rates and longer lifetime.

Details related to these performances tests comparison can be found in the report done by cmc Instruments GmbH Germany, see reference [11]

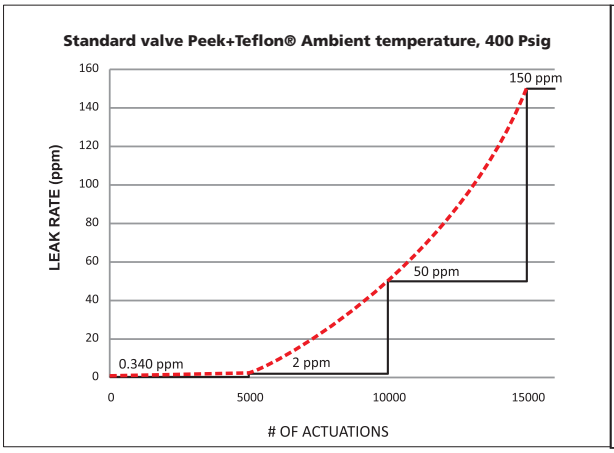

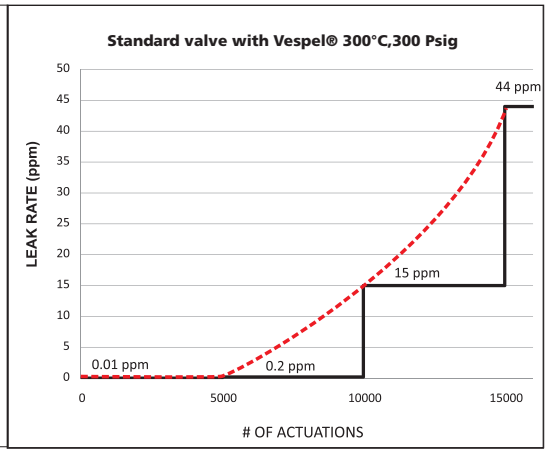

AFP TM model: RV6-16TG (Peek+Teflon®) Ambient temperature, 400 Psig

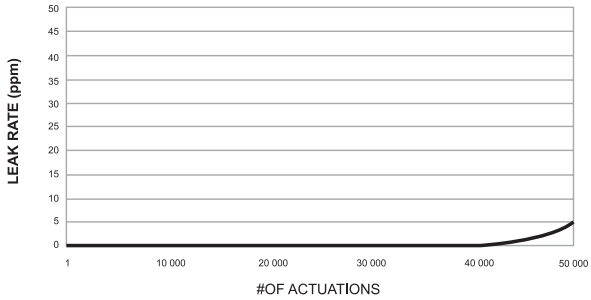

AFP TM model: RV6-16HTG (Vespel®) 260°C, 300 Psig

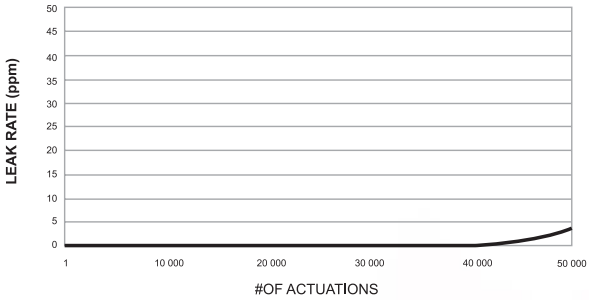

AFP TM model: RV6-16TCLP (Peek+Teflon®)
ambient temperature, 400 psig (5 sccm purge flow)

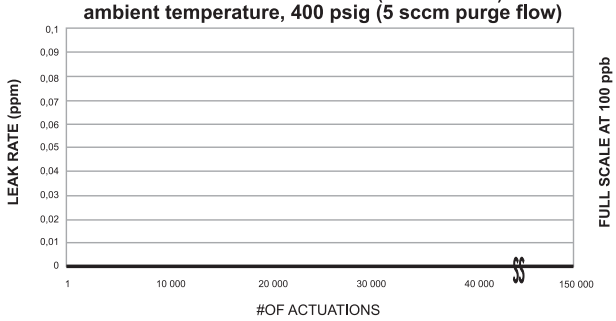

AFP TM model: RV6-16HTCLP (Vespel®)
260°C, 300 psig (5 sccm purge flow)

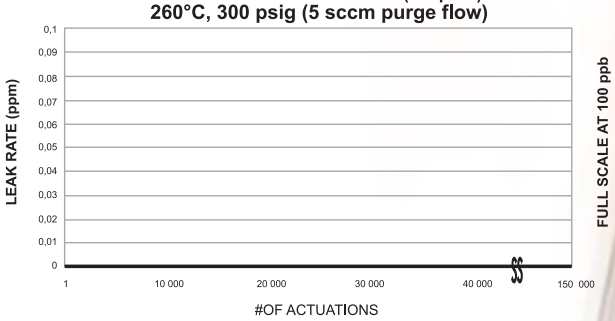

These trends speak for themselves. The improved stator and rotor have a much better performance than standard ones. When RV series valve are mounted on AFP® actuators, the overall performance is even better. A longer lifetime and a lower leak rate are achieved. Low level measurements are much easier to attain with the improvement done. Their lifetime is also improved. We have demonstrated in this paper that a GC valve is a critical component in a system. This is not a commodity. With such improved valve performance, several applications can be done with better sensitivity and peak shape. Maintenance is also reduced and system shut down can be planned, while monitoring the purge gas outlet quality. Proper selection and evaluation is very important, in order to get the best performance achievable for the selected configuration. At Analytical Flow Products™, we still actively work on how we can improve the rotary GC valve. We are presently working on new concepts, and we plan to release this technology for the HPLC market. This paper will be updated when new data is available. For more information on how to apply GC rotary valves in various analytical applications, please see AFP® application notes.

Version 2.0 of this report is under preparation. This report will include more user's data, and also the latest technology improvement we did to further increase user's system performances.

Readers comments are welcomed.

The author may be contacted at:
ygamache@afproducts.ca

References

Note: You may get copies of these references through AFP. Some copyright fees may apply in order to respect the authors right.

[1] Analytic Flow Products AN-02:
Medium Pressure Gas Chromatography (MPGC), available from AFP® website

[2] Various Rotary Valves Patents and early design.
*Fluid sample injection apparatus, US Patent #2,830,738
L.V. Sorg et AL, 1958
*Gas analyzing apparatus, US Patent #2,211,627
J.D. Morgan et AL, 1940
*Fluid sampling and injection valve, US Patent #2,972,888
J.C. Lamkin, 1961
*Fluid sampling device, US Patent #3,116,642
H.E. Weir, 1964
*Chromatograph sample system, US Patent #3,475,950
C.R. Ferrin, 1969
*US Patent #3,683,701, 1972
*US Patent #4,133,640, 1979
*Orthodyne, gas analysers,belgium

[3] Deans D.R. (1965), An improved technique for back-flushing gas chromatographic columns
J. Chrom., 18, 477-481
Deans D.R. (1968), A new technique for heart-cutting in gas chromatography
Chromatographia, 1, 18-22

[4] Varian Mass Spectrometer Manual, Part Number 0981-6999-09-070, September 1995, P.P. 3-10, 3-11

[5] Bhushan, B., Introduction to tribology, Wiley, New York, 2002

[6] AFP application note AN-04 getting full benefit of the purging system. Available from AFP website

[7] AFP RV series Rotary Valve user instructions. Available on AFP website.

[8] The effect of creep and other time related factors on plastic and elastomers. Plastics design library, Volume 1, Book A , New York, New York, ISBN-1-884207-03-0.

[9] The effect of temperature and other factors on plastic and elastomers. Second edition, Lawrence W. Keen, Plastic Design Library 2008. ISBN 978-0-8155-1568-5.

[10] Physical properties of polymers handbook, second edition, James E. Mark, Springer, chapter 54, thermal oxidative stability and degradation of polymers. ISBN 978-0-387-31235-4. 2007.

[11] Independent valves performance test report available from cmc-Instruments GmbH, Hauptstraße 388, D-65760 Eschborn, Germany, www.cmc-instruments.de

Trademark

AFP® - trademark of Analytical Flow Products company
Analytical Flow Products® - trademark of Analytical Flow Products company
Teflon® - DuPont™ registered trademark of E. I. du Pont de Nemours and Company or its affiliates.
Kevlar® - DuPont™ registered trademark of E. I. du Pont de Nemours and Company or its affiliates.
Varian® - Varian are registered trademark of Varian associates Inc
Vespel® - DuPont™ registered trademark of E. I. du Pont de Nemours and Company or its affiliates, SP-1, SP-211, SP-21, SP-3, SCP-5000, ST-2010, operating specifications.

Thanks

We would like to thank CMC Instruments GmbH from Germany for their time spent in cross checking the various valves' performance cited in this report. The author also wishes to thank various customers that have been used as beta site. Thank you all for your feedback. Finally, the author thanks Gordon McFarlane from Can Flow Technology Inc. for the English correction of this text.